mountz
the torque tool specialists®

Titan 250i Click Wrench (Adjustable)

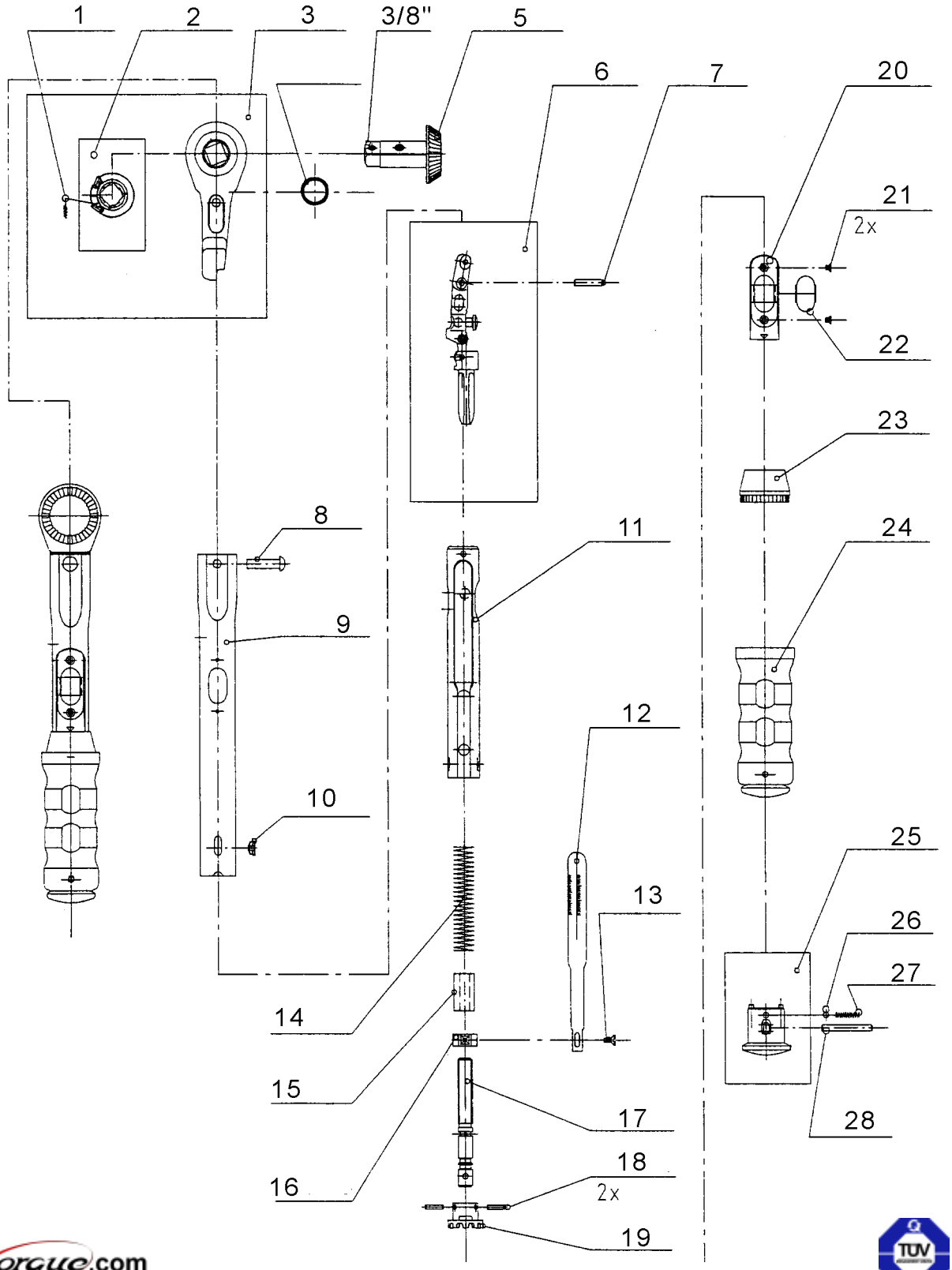

etorque.com

ISO 9001

Mountz Inc. 1080 N. 11th St., San Jose, CA 95112
Tel: 408-292-2214 Fax: 408-292-2733

mountz
the torque tool specialists®

Titan 250i Click Wrench (Adjustable)

Ref #	Part#	Qty	Description
1	28-1182749	1	Compression spring 8x3.8x0.4
2	28-1190032	1	4550-20 Pseudo assembly kit
3	28-1466496	1	Primary Lever zinc-plated
4	28-1197436	1	Seal ring DIN 3770 15x3.55
5	28-1544845	1	280011 Mushroom Head
6	28-1196448	1	Final lever 4550-20/12
7	28-1183192	1	Cylindric pin 4m6x21.5
8	28-1197819	1	Rivet pin
9	28-1198572	1	4550-00 Body Tube
10	28-1203762	1	Locking plug 4550-20
11	28-1201557	1	Spring housing 4550-00
12	28-1544764	1	280011 Scale Sheet
13	28-1200291	1	Scale screw
14	28-1181955	1	compression spring 4550-00
15	28-1243498	1	
16	28-1196073	1	nut M10x1 complete
17	28-1201565	1	Spindle screw 4550-00
18	28-1184075	1	Cylindric pin 3m6x18.8
19	28-1201514	1	4550 Gear
20	28-1535153	1	Scale frame black
21	28-1197959	2	Flat-head screw M3x4.5
22	28-1198378	1	Plastic window TORCOFIX
23	28-1198009	1	scale ring black
24	28-1195379	1	Handle black 4550-00
25	28-1446487	1	Lock Knob black RAL9005
26	28-1180266	1	Ball 4mm V
27	28-1182749	1	Compression spring 8x3.8x0.4
28	28-1183087	1	Cylindric pin 4m6x36

etorque.com

ISO 9001

Mountz Inc. 1080 N. 11th St., San Jose, CA 95112
Tel: 408-292-2214 Fax: 408-292-2733