mountz
the torque tool specialists®

Titan 75F Click Wrench (Adjustable)

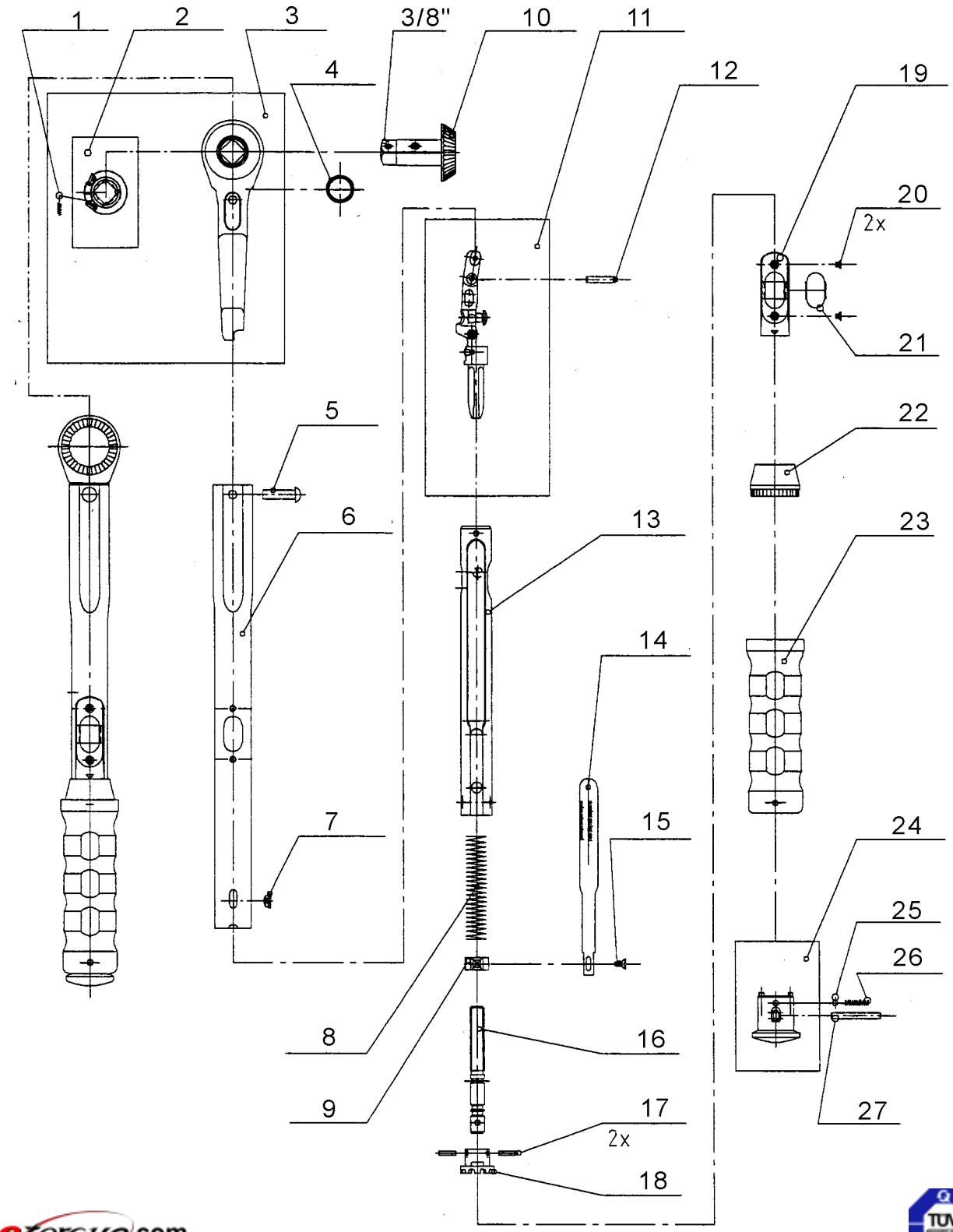

etorque.com

ISO 9001

Mountz Inc. 1080 N. 11th St., San Jose, CA 95112
Tel: 408-292-2214 Fax: 408-292-2733

mountz
the torque tool specialists®

Titan 75F Click Wrench (Adjustable)

Ref #	Part#	Qty	Description
1	28-1182749	1	Compression spring 8x3.8x0.4
2	28-1190032	1	4550-20 Pseudo assembly kit
3	28-1205153	1	Primary Lever zin-plated assy.
4	28-1197436	1	Seal ring DIN 3770 15x3.55
5	28-1197819	1	Rivet pin
6	28-1544705	1	280012 Body Tube
7	28-1203762	1	Locking plug 4550-20
8	28-1183982	1	Compression spring 4550-20
9	28-1196073	1	nut M10x1 complete
10	28-1544845	1	280011 Mushroom Head
11	28-1196448	1	Final lever 4550-20/12
12	28-1183192	1	Cylindric pin 4m6x21.5
13	28-1201549	1	Spring housing 4550-20 empty
14	28-1544772	1	280012 Scale Sheet
15	28-1200291	1	Scale screw
16	28-1201531	1	Spindle screw 4550-30
17	28-1184075	2	Cylindric pin 3m6x18.8
18	28-1201514	1	4550 Gear
19	28-1544047	1	Flat-head screw M3x4.5
20	28-1197959	2	Flat-head screw M3x4.5
21	28-1198378	1	Plastic window TORCOFIX
22	28-1198025	1	Scale ring black
23	28-1197916	1	3550-20/33 handle black
24	28-1446487	1	Lock Knob black RAL9005
25	28-1180266	1	Ball 4mm V
26	28-1182749	1	Compression spring 8x3.8x0.4
27	28-1183087	1	Cylindric pin 4m6x36

etorque.com

ISO 9001

Mountz Inc. 1080 N. 11th St., San Jose, CA 95112
Tel: 408-292-2214 Fax: 408-292-2733