mountz
the torque tool specialists®

Universal Adapter for Telescoping Arms

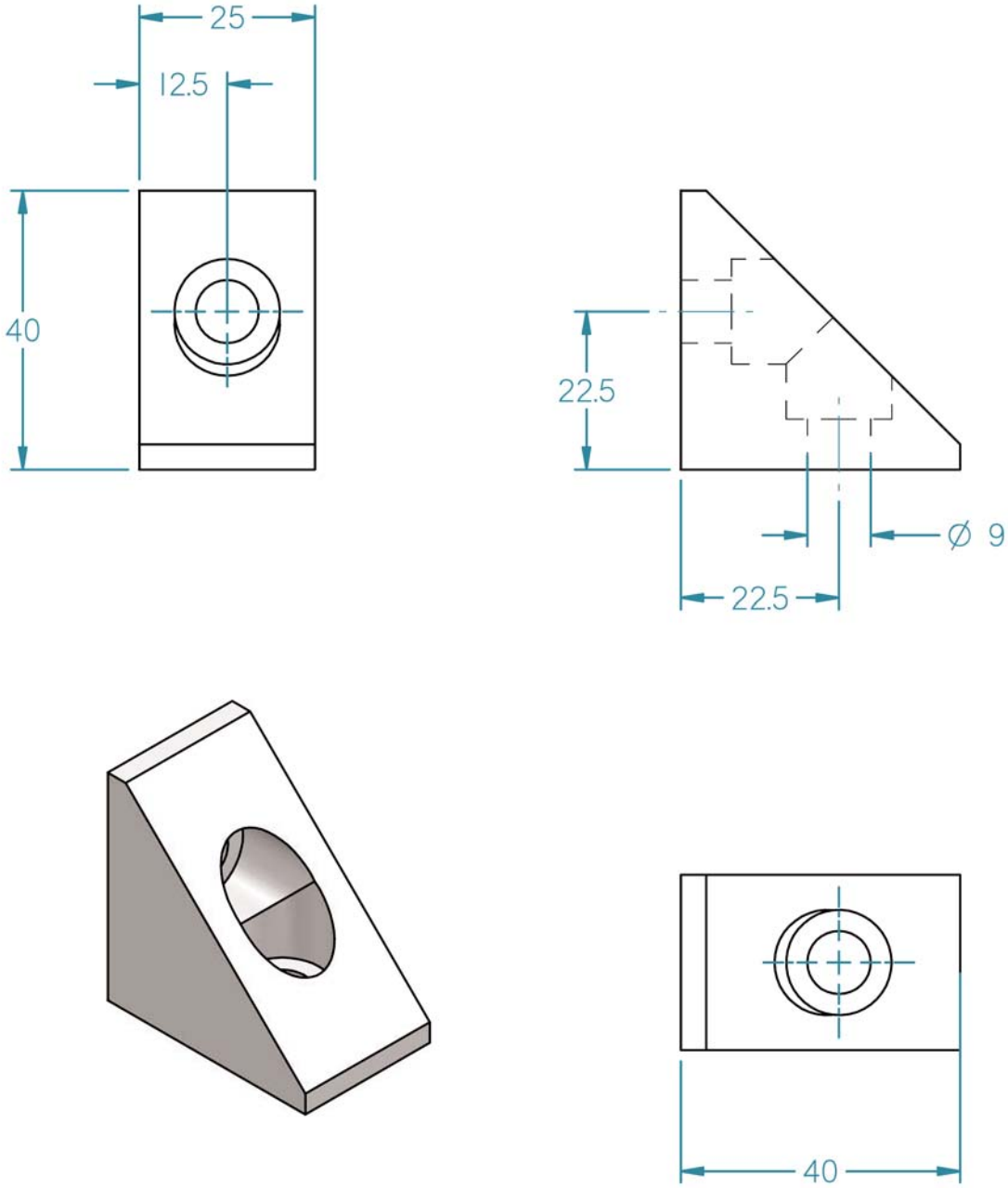

The Universal Adapter allows the Telescoping Torque Arms to be mounted a wall, assembly line or workbench. The following Telescoping Arms come equipped with a Universal Adapter.

EZ-12T
EZ-30T
EZ-80T
EZ-140T

Note: The EZ-200T models do not come with a Universal Adapter.

Mountz Inc. 1080 N. 11th Street, San Jose, CA 95112
Tel: (408) 292-2214 Fax: (408) 292-2733 www.etorque.com